Features

- Resistance welded type crystal units.
- High frequency stability and reliability.
- A great number of standard frequencies and wide frequency range.
- Higher frequency pullability and lower equivalent series resistance.
- Lower cost and highly mass production capacity.
- The best choice of TV, STB, LCDM, and Cable Modem.
- RoHS Compliant / Pb Free.

Electrical Specifications

Frequency Range	1.50 ~ 120.00 MHz
Load Capacitance	Series、6~32 pF、 or specify
Frequency Tolerance (at 25 ℃)	±10、±20、±30 ppm、 or specify
Frequency Stability Over Operating Temperature Range	±10、±20、±30 ppm、 or specify
Operating Temperature Range	-20 ~ +70 ℃、-40~+85 ℃、or specify
Storage Temperature Range	-40 ~ +85 ℃
Shunt Capacitance (C0)	7 pF Max.
Drive Level	1 ~ 1000 μW (100 μW typical)
Insulation Resistance	500 MΩ Minimum at 100VDC
Aging (at 25℃)	±3 ppm / year Max.

Equivalent Series Resistance(ESR)

Frequency Range (MHz)	Mode	ESRΩ(MAX)
1.84~1.99	FUND	500
2.00~2.99	FUND	400
3.00~3.49	FUND	150
3.50~3.99	FUND	120
4.00~4.49	FUND	100
4.50~4.99	FUND	80
5.00~5.99	FUND	70
6.00~6.99	FUND	60
7.00~7.99	FUND	40
8.00~14.99	FUND	30
8.00~14.99	FUND	25
27.00~29.99	3RD	50
30.00~44.99	3RD	40
45.00~100.0	3RD	35
80.00~120.0	5TH	80

Frequency Stability Over Operating Temperature Range

Temperature Range	Frequency Stability (ppm)						
	±3	±5	±7.5	±10	±15	±20	±30
0~+50℃	*	*	*	*	*	*	*
-10~+60℃		*	*	*	*	*	*
-20~+70℃			*	*	*	*	*
-30~+80℃				*	*	*	*
-40~+85℃					*	*	*

Dimensions

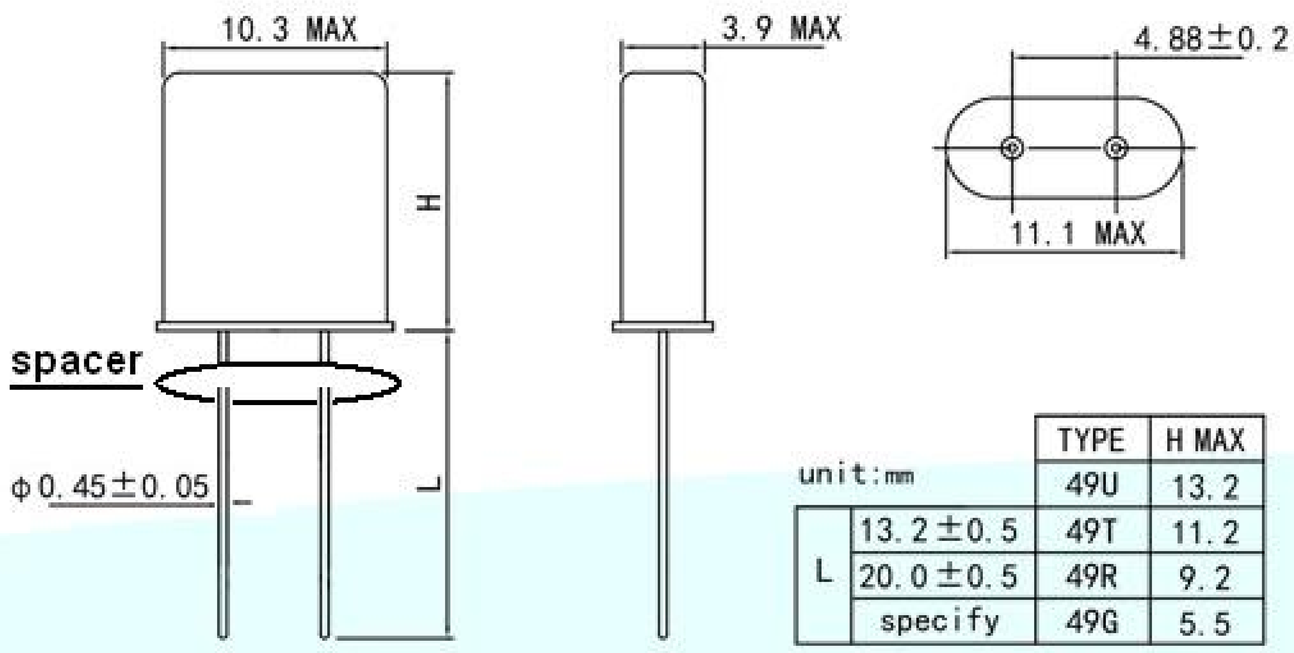

unit:mm

		TYPE	H MAX
		49U	13.2
L	13.2±0.5	49T	11.2
	20.0±0.5	49R	9.2
	specify	49G	5.5