SPECIFICATION

1. SCOPE

This specification is applied to the piezoelectric diaphrogm.

2. SPECIFICATION (at25℃)

2.1 Resonant Frequency	:	3.2± 0.3 KHz
2.2 Resonant Resistance	:	200 Ω max
2.3 Capacitance	:	32000 pF± 30% at 100Hz
2.4 Input Voltage	:	30 Vp-p max
2.5 Operating Temperature	:	-20~+50℃
2.6 Storage Temperature	:	-20~+60℃
3 DIMENSION	:	as per figure

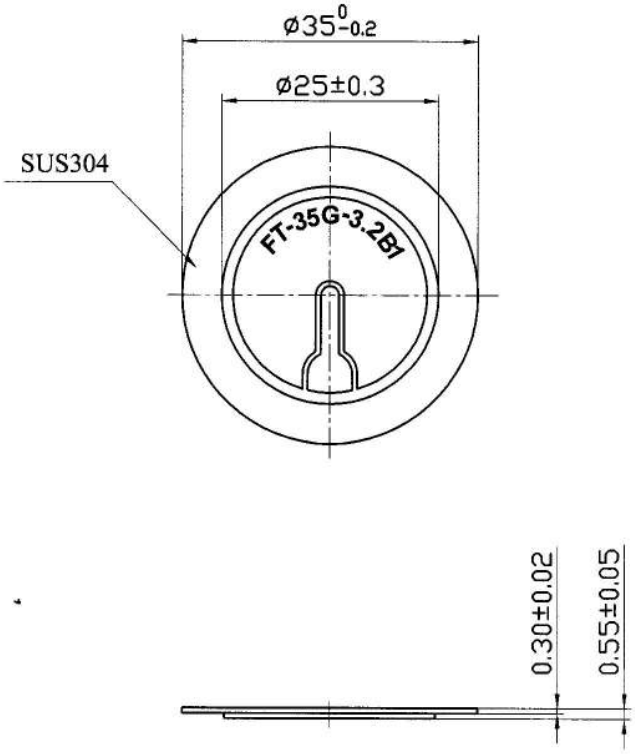

TOLERANCES UNLESS NOTED OTHERWISE .X ± .XX ± .XXX ± 90° FORMED +2° ANGLES -1°	DRAWN		KEPO MODEL NO.	CUSTOMER QUARTZ
	DESIGN		FT-35G-3.2B1	CUSTOMER NO.
	CHECKED			
	APPROVED		DWG NO.	
	DATE	08.02.26	OEM2942	VER 1.1 SCALE
	CONTRACT NO.			UNIT mm SHEET
FIRST ANGLE PROJECTION	AGENCY APPROVAL		KEPO CO.,LTD.	TEL:(+86)574-88370330 FAX:(+86)574-88370329